Cambridge International AS & A Level

Cambridge International Examinations
Cambridge International Advanced Subsidiary and Advanced Level

CANDIDATE NAME

CENTRE NUMBER

CANDIDATE NUMBER

2228116071 1

PHYSICS **9702/31**

Paper 3 Advanced Practical Skills 1 **May/June 2018**

2 hours

Candidates answer on the Question Paper.

Additional Materials: As listed in the Confidential Instructions.

READ THESE INSTRUCTIONS FIRST

Write your Centre number, candidate number and name on all the work you hand in.
Write in dark blue or black pen.
You may use an HB pencil for any diagrams or graphs.
Do not use staples, paper clips, glue or correction fluid.
DO **NOT** WRITE IN ANY BARCODES.

Answer **both** questions.
You will be allowed to work with the apparatus for a maximum of one hour for each question.
You are expected to record all your observations as soon as these observations are made, and to plan the presentation of the records so that it is not necessary to make a fair copy of them.
You are reminded of the need for good English and clear presentation in your answers.

Electronic calculators may be used.
You may lose marks if you do not show your working or if you do not use appropriate units.

Additional answer paper and graph paper should be used only if it becomes necessary to do so.

At the end of the examination, fasten all your work securely together.
The number of marks is given in brackets [ ] at the end of each question or part question.

For Examiner's Use	
1	
2	
Total	

This document consists of **12** printed pages.

© UCLES 2018

CAMBRIDGE International Examinations

You may not need to use all of the materials provided.

1 In this experiment, you will investigate the oscillations of a mass.

(a) Set up the apparatus as shown in Fig. 1.1.

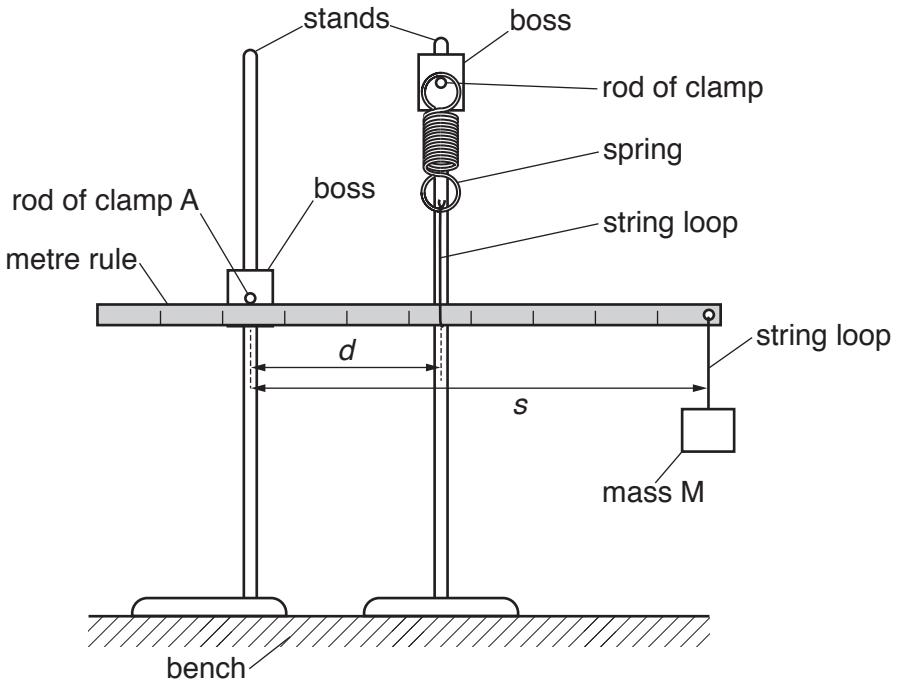

Fig. 1.1

- Hang mass M from the string loop near the end of the metre rule.
- Ensure that the metre rule is pushing up against the rod of clamp A at approximately the 24 cm mark.
- The distance between the rod of clamp A and the string attached to the spring is *d*. Adjust the position of the stand holding the spring so that *d* is approximately 30 cm.
- Adjust the height of the clamps until the rule is horizontal. Ensure that the spring is vertical.
- Measure and record *d*.

d = ...

- The distance between the rod of clamp A and the string supporting M is *s*.

  Measure and record *s*.

s = ...
[1]

(b) • Pull M down through a short distance.

• Release M so that it oscillates.

• Determine the period T of these oscillations.

T = ... [1]

(c) • **Without moving the stands**, slide the rule horizontally through the string loop so that d remains constant but s changes.

• Adjust the height of the clamps until the rule is horizontal. Ensure that the spring is vertical.

• Measure and record s.

s = ...

• Repeat **(b)**.

T = ...
[1]

(d) Vary s and repeat **(c)** until you have five sets of values of s and T. You may include your previous sets of readings.

Record your results in a table. Include values of T^2 in your table.

[9]

(e) **(i)** Plot a graph of T^2 on the y-axis against s on the x-axis. [3]

(ii) Draw the straight line of best fit. [1]

(iii) Determine the gradient and y-intercept of this line.

gradient = ...

y-intercept = ...

[2]

© UCLES 2018

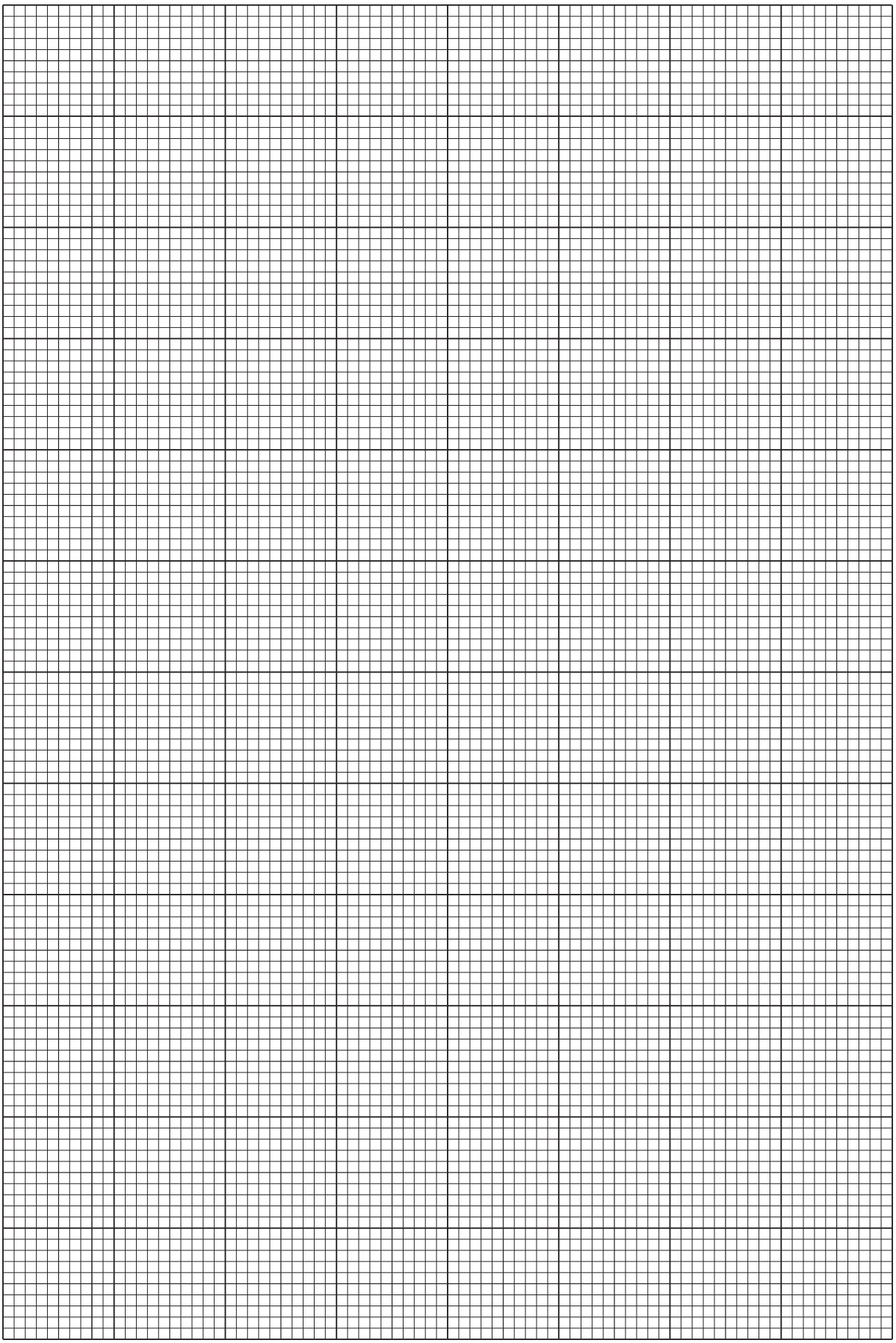

© UCLES 2018

[Turn over

(f) It is suggested that the quantities T and s are related by the equation

$$T^2 = Ps + Q$$

where P and Q are constants.

Using your answers in **(e)(iii)**, determine the values of P and Q.
Give appropriate units.

$P =$ .....

$Q =$ .....
[2]

[Total: 20]

© UCLES 2018

You may not need to use all of the materials provided.

2 In this experiment, you will investigate the oscillations of a magnet.

(a) You have been provided with a metal plate.

- Use tape to secure the plate at the edge of the bench as shown in Fig. 2.1.

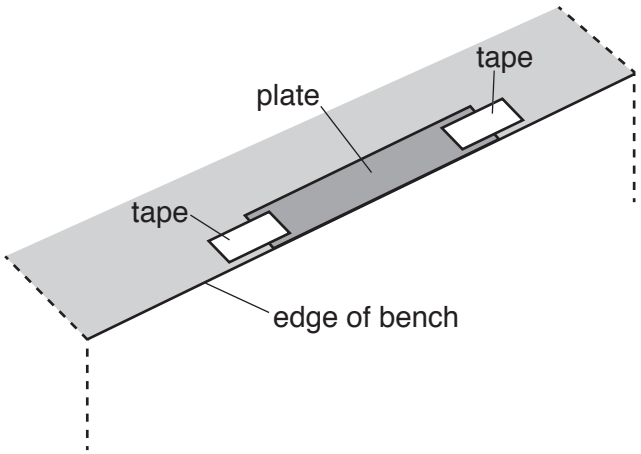

Fig. 2.1

- Use more tape to secure one of the paper strips to the bench so that it covers the plate, as shown in Fig. 2.2.

TOP VIEW OF BENCH

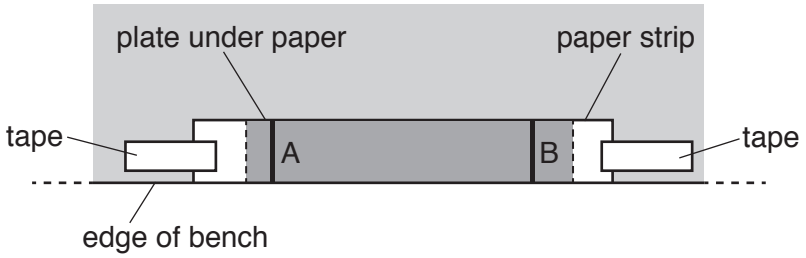

Fig. 2.2

You have been provided with a bar magnet attached to a string.

- Set up the apparatus as shown in Fig. 2.3.

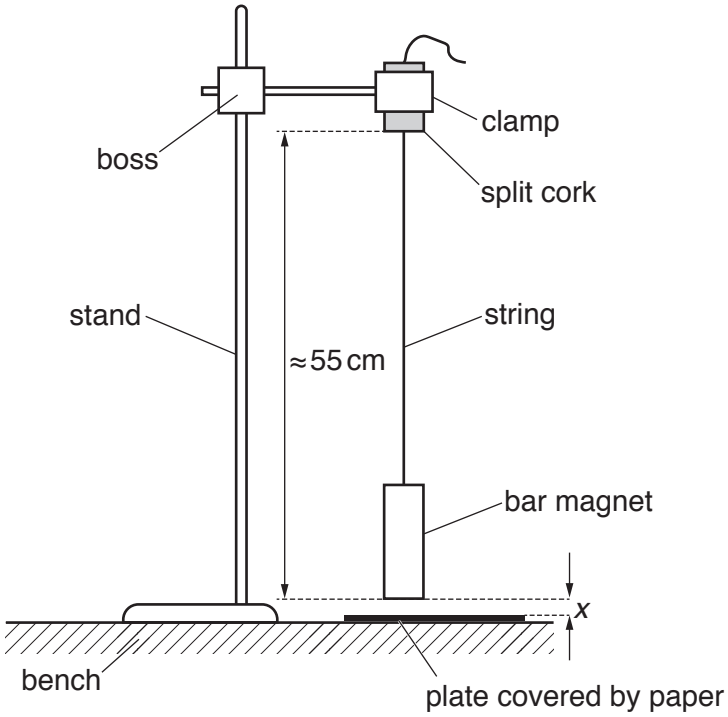

Fig. 2.3

- The distance between the bottom of the split cork and the bottom of the magnet should be approximately 55 cm.

- The distance between the bottom of the magnet and the paper strip is *x*. Adjust the height of the magnet so that *x* is approximately 3 mm.

- Measure and record *x*.

x = ... [1]

© UCLES 2018

(b) • Move the stand until the magnet hangs with one edge vertically above line A, as shown in Fig. 2.4.

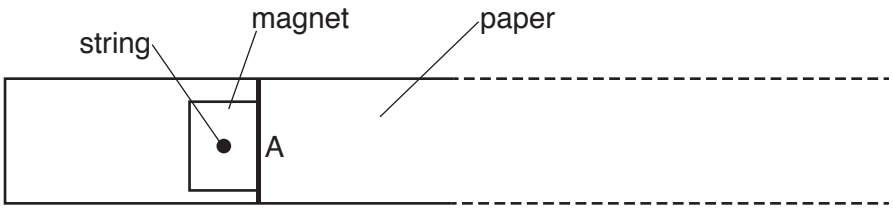

Fig. 2.4

• Pull the magnet to the right, keeping the string straight, until the same edge of the magnet is above line B, as shown in Fig. 2.5.



Fig. 2.5

• Release the magnet. The magnet will oscillate.

• Draw a line on the paper at the position of the edge of the magnet after 30 complete oscillations.

• Label this line C. The distance BC is *y* as shown in Fig. 2.6.

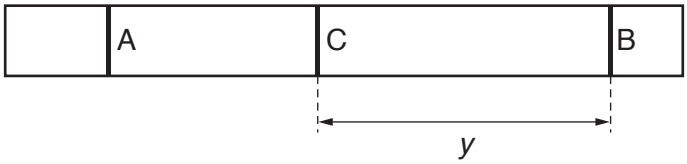

Fig. 2.6

• Measure and record *y*.

y = ... [2]

(c) Estimate the percentage uncertainty in your value of y.

percentage uncertainty = ... [1]

(d)
- Increase x to approximately 8 mm.
- Measure and record x.

x = ...

- Repeat **(b)**.

y = ...
[3]

(e) It is suggested that the relationship between y and x is

$$y = \frac{k}{\sqrt{x}}$$

where k is a constant.

(i) Using your data, calculate two values of k.

first value of k = ...

second value of k = ...
[1]

© UCLES 2018

(ii) Explain whether your results support the suggested relationship.

.....

.....

.....

.....[1]

(f) (i)
- Remove the plate and paper strip from the bench. Do not adjust the height of the magnet above the bench.
- Using the second strip of paper, repeat **(b)** without the plate.

y = ... [1]

(ii) Using your second value of k, calculate x when y has the value given in **(f)(i)**.

x = ... [1]

(iii) Justify the number of significant figures that you have given for your value of x in **(f)(ii)**.

.....

.....

.....[1]

(g) (i) Describe four sources of uncertainty or limitations of the procedure for this experiment.

1. .....

.....

2. .....

.....

3. .....

.....

4. .....

.....

[4]

(ii) Describe four improvements that could be made to this experiment. You may suggest the use of other apparatus or different procedures.

1. .....

.....

2. .....

.....

3. .....

.....

4. .....

.....

[4]

[Total: 20]

Permission to reproduce items where third-party owned material protected by copyright is included has been sought and cleared where possible. Every reasonable effort has been made by the publisher (UCLES) to trace copyright holders, but if any items requiring clearance have unwittingly been included, the publisher will be pleased to make amends at the earliest possible opportunity.

To avoid the issue of disclosure of answer-related information to candidates, all copyright acknowledgements are reproduced online in the Cambridge International Examinations Copyright Acknowledgements Booklet. This is produced for each series of examinations and is freely available to download at www.cie.org.uk after the live examination series.

Cambridge International Examinations is part of the Cambridge Assessment Group. Cambridge Assessment is the brand name of University of Cambridge Local Examinations Syndicate (UCLES), which is itself a department of the University of Cambridge.